Superior Curing Technology

SPARE PARTS LIST

IRT 3-1 PcD
IRT 3-2X PcD
IRT 4-1 PcAuto
IRT 4-2X PcAuto

This page is intentionally left blank

Table of content:

IRT3-1 PcD
IRT3-2 PcD
IRT4-1 PcAuto
IRT4-2 PcAuto

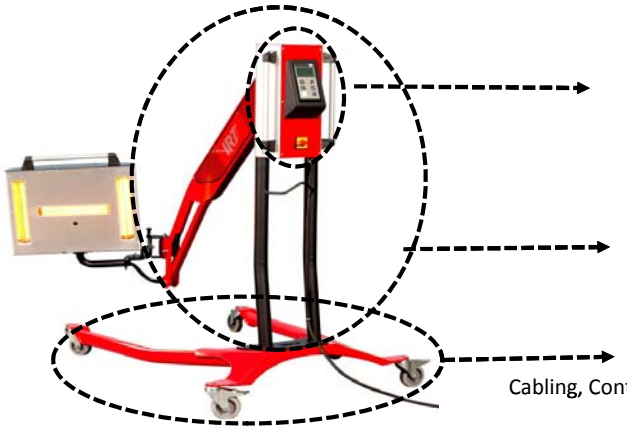

	Page
Controlunit	4-6
Cassette Mechanics	7-9
Cassette front (3 lamps)	10
Cassette front (4 lamps)	11
Reflectors	12-14
Mechanical structure	16-20
Base	21
Cabling, Contacts, Pyrometer and Distance components	22-23

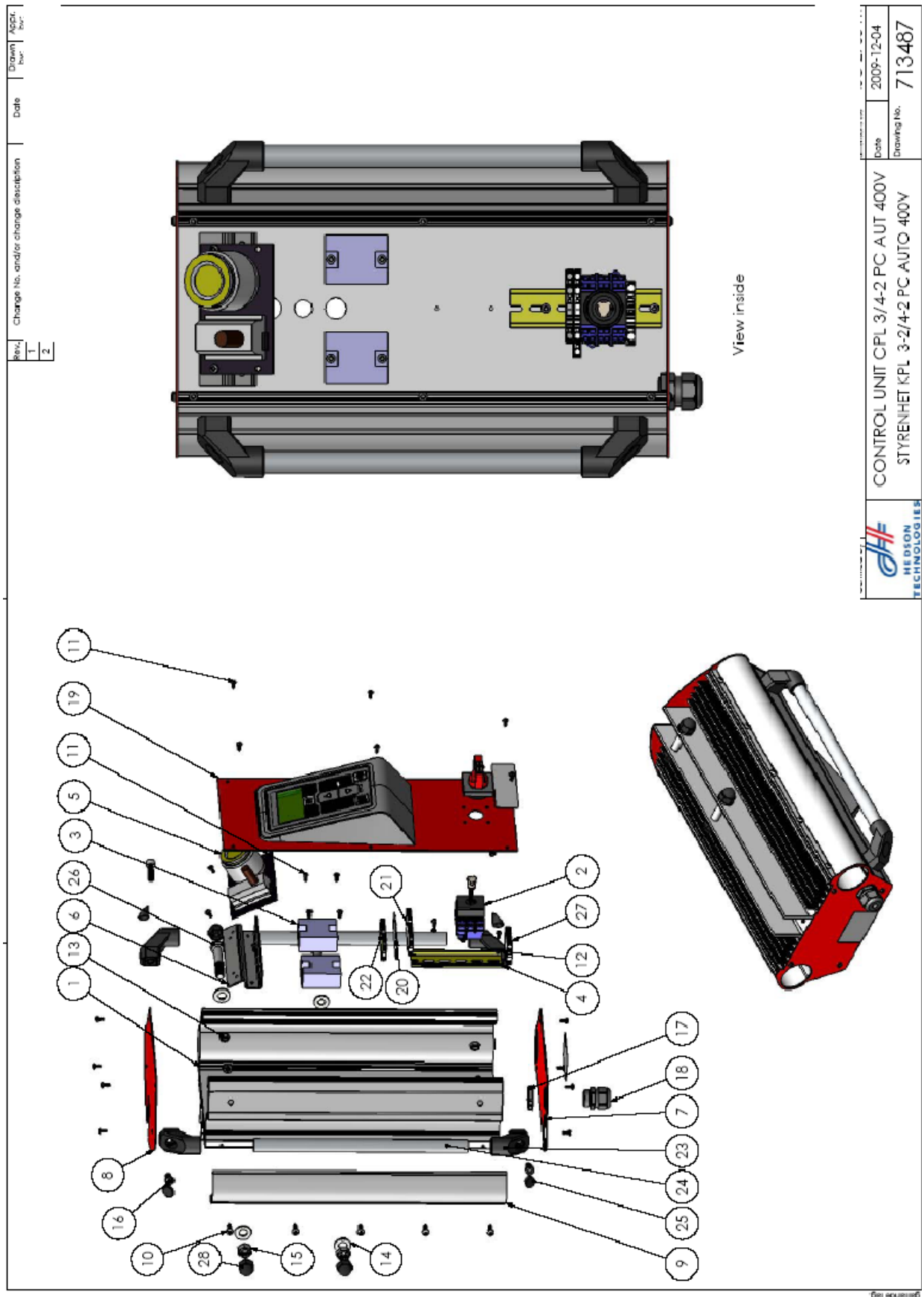

This document is the property of Hedson Technologies and may not be copied without our written permission. The contents thereof must not be imparted to a third party nor be used for any unauthorized purpose. Contravention will be prosecuted.

De ma ritning är Hedson Technologies egendom. Den får icke vare sig i ursprungligt eller ändrat skick utan vårt medgivande kopieras eller mångfaldigas, förevisas för eller på annat sätt delgivas eller utlämnas till tredje person. Overtrædelse ihår av bevaras med stöd av gällande lag.

Parts List 713487 rev3

Dwg pos	Article number	Description (SE)	Description (UK)	Qty	Unit
0	750392	ELSCHEMA IRT4-2/4-20 PcAuto 400V 3~	SCEMATIC IRT4-2/4-20 PcAuto 400V 3~	1	pcs
1	713621	PROFIL STYRENHET KPL 450	PROFIL CONTROL UNIT	1	pcs
2	713823	BRYTARE 32A 16KW 380/440V	POWER BREAKER 32A 16KW 380/440V	1	pcs
3	750227	SOLID STATE RELÄ CELDUC SOB763670	POWER MODULE ASSEMBLY	2	pcs
4		MONTERINGSSKENA L=140	DIN-RAIL L=140	1	pcs
5	750300	TRAFO 230/400/480VAC/12VDC	12VDC 30VA 2.5 A	1	pcs
6	713619	PLÅT FÖR TRAFO	PLATE FOR TRAFO	1	pcs
7	713617	BOTTEN STYRENHET	BOTTOM CONTROL UNIT	1	pcs
8	713618	LOCK STYRENHET	COVER PLATE CONTROL UNIT	1	pcs
9	713615	SIDOFÄSTE STYRENHET	BRACKET CONTROL UNIT	2	pcs
10		SKR MRT-GF M5X16FZB ISO 14583	SKR MRT-GF M5X16FZB ISO 14583	10	pcs
11		SKR MRT-TX M 4X10 FZB	SCREW MRT-TX M 4X10 FZ	23	pcs
12		BRICKA AZ 4.3X8X0.5 AZ FZ	WASHER, LOCK M4	2	pcs
13		MUTTER NYLOCK M 8 X13X8 FZ LÅG	NUT NYLOCK M8x13x8 FZ LOW	4	pcs
14		BRICKA BRB M13 FZ 13x24x2,5 HB200	WASHER BRB M13 FZ 13x24x2,5 HB200	4	pcs
15		MUTTER NYLOCK M12 FZB HÖG 18MM	NUT M12 NYLOC HIGH 18MM	2	pcs
16		SKR MC6S M 8X25 FZ	SCREW MC6S M8x25 FZ	4	pcs
19	713489	STYRENHETSFRONT SMST	CONTROL UNIT FRONT ASM	1	pcs
20		ÄNDPLATTA 4MM GRÅ	TERMINAL BLOCK COVER 4MM GREY	1	pcs
21		PLINT 4X4/6MM GRÅ	TERMINAL BLOCK 4X4/6MM GREY	1	pcs
22		PLINT 3X4/6MM G/G	TERMINAL BLOCK 3X4/6MM G/G	1	pcs
23	713766	SIDSTYCKE RÖRHANDTAG	FASTENER GRAB RAIL	4	pcs
24	710372	HANDTAGSRÖR	HANDLE TUBE	2	pcs
25	713784	PLASTPLUGG HANDTAG	PLASTIC PLUG FOR HANDLE	4	pcs
26		SKR M6S M12X 65 FZB NISO DELGÄNGAD	SCREW M6S M12X65	2	pcs
27		PLINT 2X4/6MM G/G	TERMINAL BLOCK 2X4/6MM G/G	1	pcs
28	193723	TÄCKHATT MUTTER M12 18MM	CAP NUT BLACK M12 18MM	4	pcs
29		ETIKETT 65x70	LABEL 65x70	1	pcs
30		ETIKETT	LABEL	1	pcs

Kablar se sista sidorna **Cables see last pages**

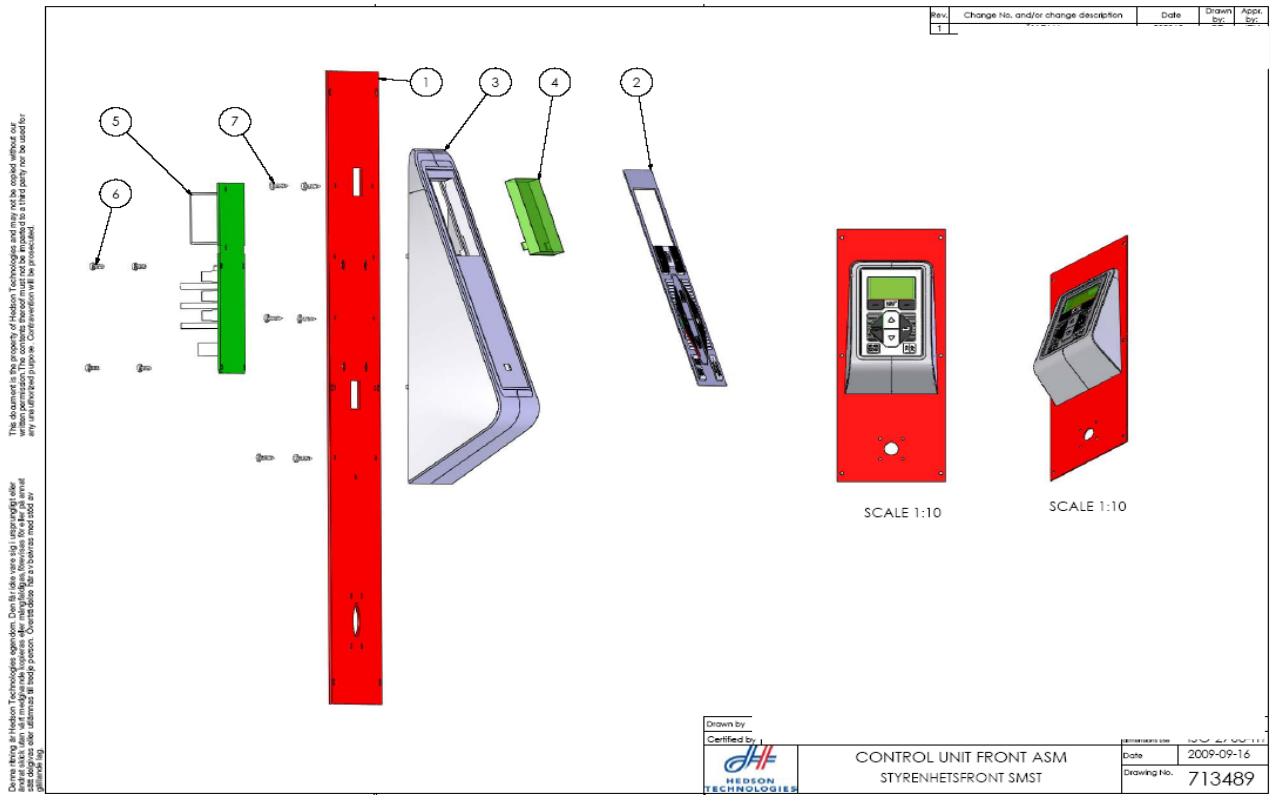

Partslist 713489 rev1

Dwg position	Article number	Description (SE)	Description (UK)	Qty	Unit
1	713778	FRONTPLÅT STYRENHET SMST	FRONT PLATE CONTROL UNIT ASM	1	pcs
2	750366	TANGENTBORD IRT 8 KNAPPAR	KEYBOARD IRT 8 KEYS	1	pcs
3	713755	PLASTKÅPA STYRENHET	DISPLAY UNIT COVER	1	pcs
4	750220	DISPLAY 128x64 PUNKTER M BELYSNING	DISPLAY 128X64 POINTS WITH LIGHTING	4	pcs
5*		KK STYRKORT PROG. IRT	PCB ARCONA FOR IRT	1	pcs
6		SKR MRT-TX M3x 6 FZB ISO 14583	SCREW M3X6 FZB ISO14583	4	pcs
7		SKRUV RTS B4x9,5 DIN 7981C STÅL FZB	SCREW RTS B4x9,5 FZ DIN7981C	6	pcs

PCB preloaded with the software for different Models

	Article number	Description (SE)	Description (UK)
5	714012	DATORKORT IRT 3-1 PcD	PCB IRT 3-1 PcD
5	714013	DATORKORT IRT 3-2 PcD	PCB IRT 3-2 PcD
5	714014	DATORKORT IRT 4-1 PcAuto	PCB IRT 4-1 PcAuto
5	714015	DATORKORT IRT 4-2 PcAuto	PCB IRT 4-2 PcAuto
5	714016	DATORKORT IRT 3-20 PcD	PCB IRT 3-20 PcD
5	714017	DATORKORT IRT 4-20 PcAuto	PCB IRT 4-20 PcAuto

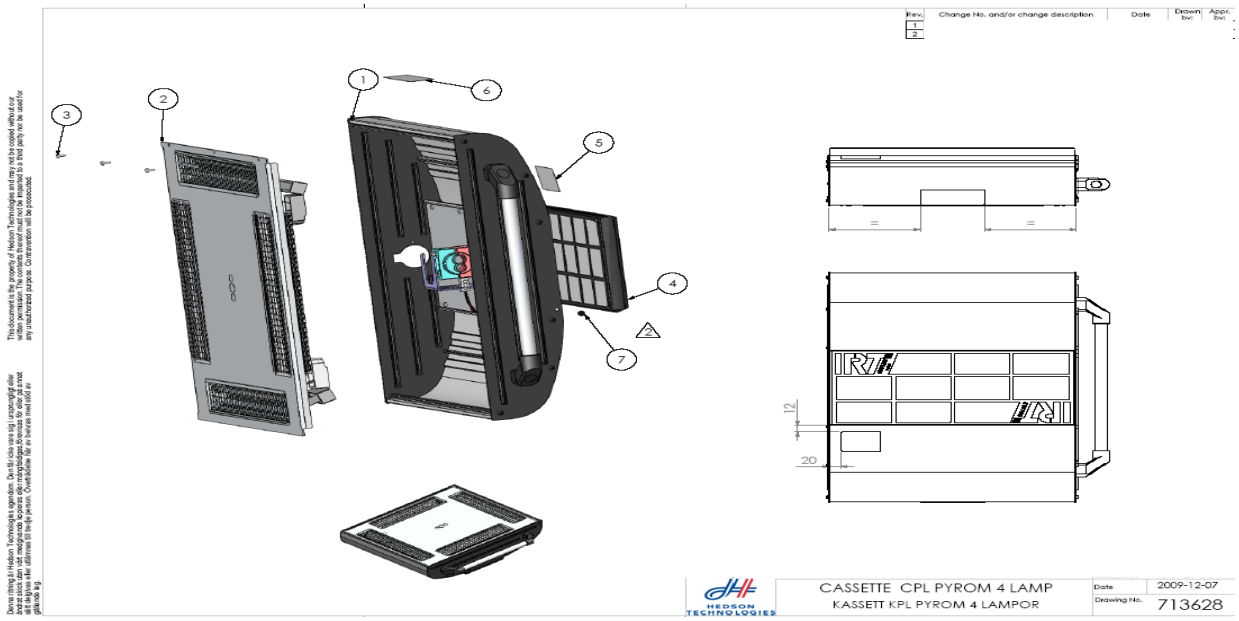

Partslist 713628 rev2

Dwg position	Article number	Description (SE)	Description (UK)	Qty	Unit
1	713853	BAKSTYCKE KPL 400V	BACK PLATE CPL 400V	1	pcs
2	713630	FRONTPLÅT KPL 400V 3PH	FRONTPLATE CPL 400V 3PH	1	pcs
3		SKR RXK B8X9,5 -FZB -H	SCREW RXK B8X9,5 FZB H	3	pcs
4	713576	IRT AIR FILTER WITH 2 PLUGS	IRT AIR FILTER WITH 2 PLUGS	1	pcs
5		SKYLT VARNING	LABEL WARNING	1	pcs
6		ETIKETT 65x70	LABEL 65x70	1	pcs
7*		NYLONNIT FÖR FILTER	FINNED NYLON RIVET FOR FILTER	2	pcs

* 2 Pcs included in item 4

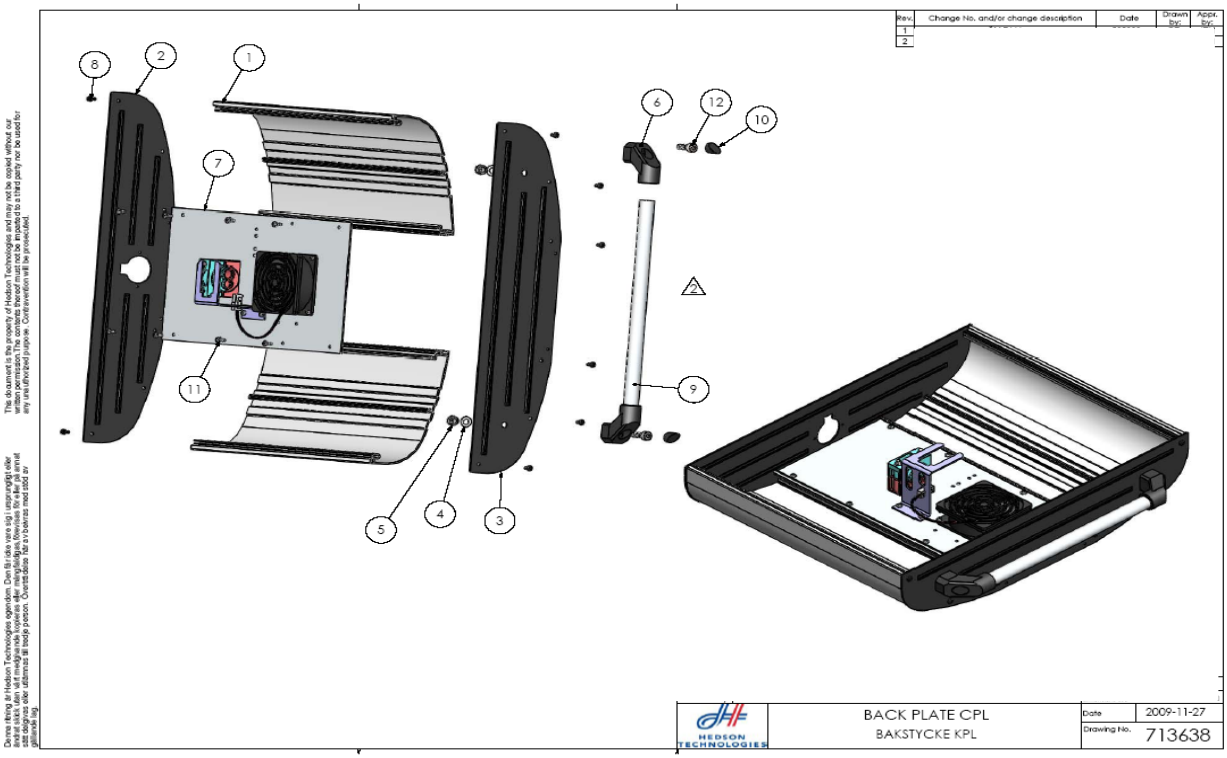

Partslist 713638 rev2

Dwg position	Article number	Description (SE)	Description (UK)	Qty	Unit
1	713577	PROFIL KASSETT	PROFILE CASSETTE	2	pcs
2	713624	GAVEL KASS. HYPERION BUSSNINGSSIDA	GABLE HYPERION CASS. BUSHING SIDE	1	pcs
3	713583	GAVEL KASS. HYPERION HANDTAGSSIDA	GABLE HYPERION CASS. HANDLE SIDE	1	pcs
4		BRICKA BRB M 8 FZ 8.4X16X1.5 HB200	WASHER BRB M8 FZ 8,4X16X1,5 HB200	2	pcs
5		MUTTER NYLOCK M 8 X13X8 FZ LÅG	NUT NYLOCK M8x13x8 FZ LOW	2	pcs
6	713766	SIDSTYCKE RÖRHANDTAG	FASTENER GRAB RAIL	2	pcs
7	713639	FLÄKTPLÅT KPL	PLATE FOR FAN CPL	1	pcs
8		SKR MRT-GF M 4X10 SVART	SCREW MRT-GF M 4X10 ZINK IRON BLACK	12	pcs
9	710372	HANDTAGSRÖR	HANDLE TUBE	1	pcs
10	713784	PLASTPLUGG HANDTAG	PLASTIC PLUG FOR HANDLE	2	pcs
11		SKR MRT-TX M 4X10 FZB	SCREW MRT-TX M 4X10 FZ	8	pcs
12		SKR MC6S M 8X25 FZ	SCREW MC6S M8x25 FZ	2	pcs

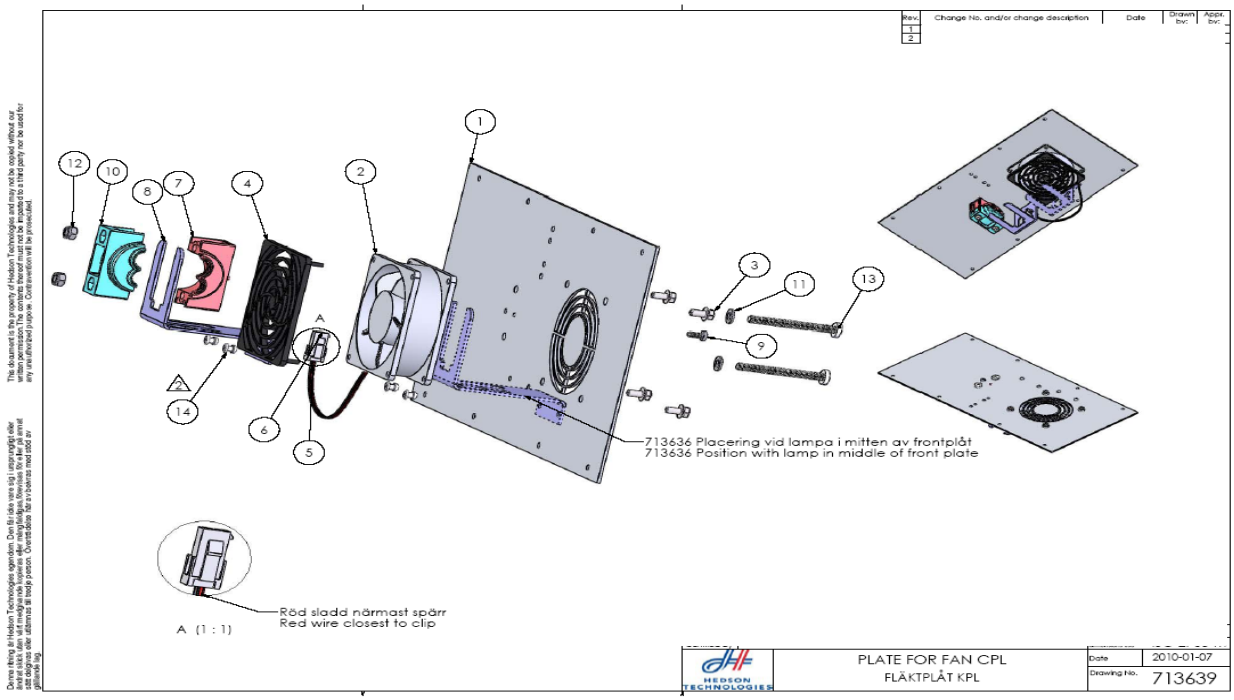

Partslist 713639 rev2

Dwg position	Article number	Description (SE)	Description (UK)	Qty	Unit
1	713622	FLÄKTPLÅT	PLATE FOR FAN	1	pcs
2*		FLÄKT 12VDC	FAN 12VDC	1	pcs
3		SKR M6SF-TT M 5X10 GÄNGDRIVANDE FZ	SCREW M6SF-TT M5X10 THREADING FZ	4	pcs
4*		SKYDDSGALLER FÖR FLÄKT 92X92MM	PROTECTIVE MESH FOR FAN 92X92 MM	1	pcs
5*		KRIMPSTIFT AMP AWG 26-22	CRIMP PIN AMP AWG 26-22	2	pcs
6*		KONTAKTDON 2-P HANE AMP CHASSIEMONT	CONNECTOR 2-P MALE AMP PANEL MOUNT	1	pcs
7	713654	LAGER INRE UNDRE	BEARING INNER LOWER	1	pcs
8	713636	HÅLLARE FÖR GIVARE	BRACKET FOR SENSORS	1	pcs
9		SKR MRT-TX M 4X10 FZB	SCREW MRT-TX M 4X10 FZ	1	pcs
10	713609	LAGER INRE ÖVRE	BEARING INNER UPPER	1	pcs
11		BRICKA BRB M 6 A2	WASHER BRB M6 A2	2	pcs
12		MUTTER NYLOCK M 6 LÅG DIN 985-6	NUT NYLOCK M6 LOW DIN985-6	2	pcs
13		SKR MRX M6X60 DIN7985FZB STÅL PH	SCR MRX M6X60 DIN7985FZB STEEL PH	2	pcs
14		NIT BLIND 4X 8.5 TAP56 AL 75514.1	RIVET BLIND 4X 8.5	2	pcs
* 2+4+5+6	714011	FLÄKT12V MED NÄT OCH KONTAKT DON	FAN 12V W PROTECTIVE MESH AND PLUG		

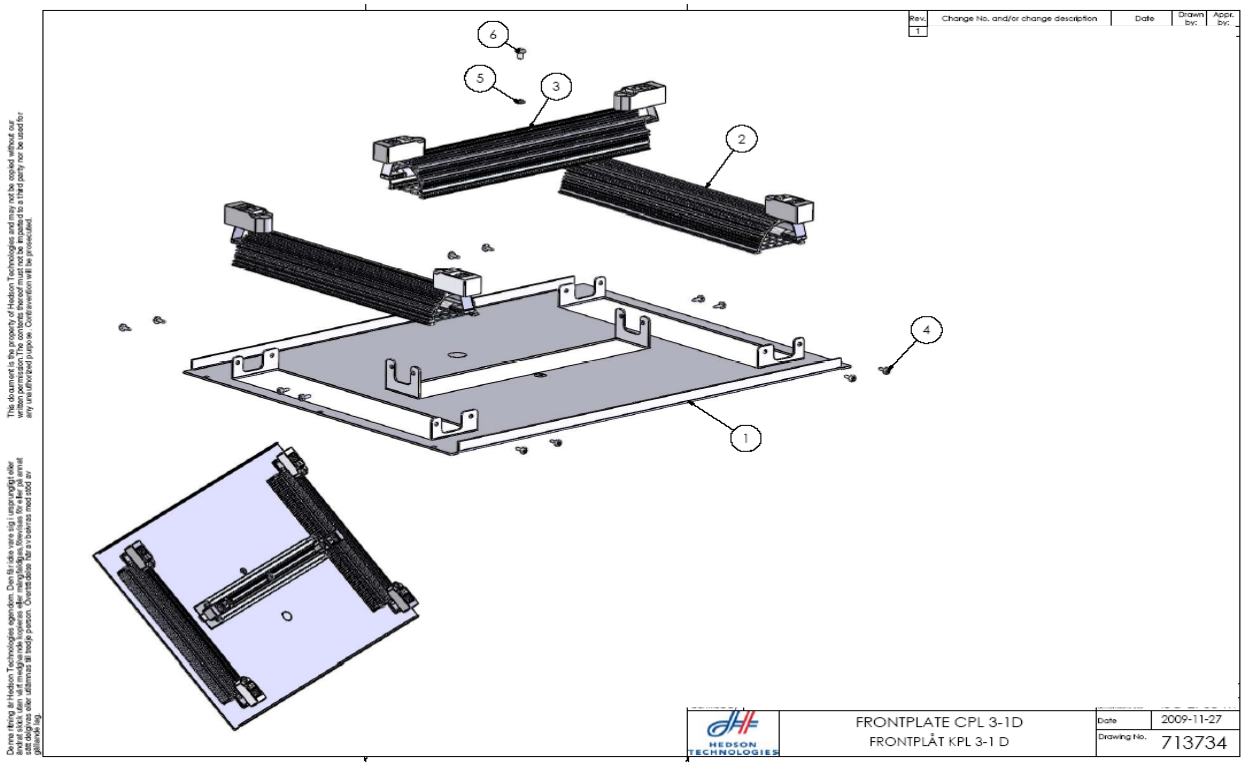

F

Dwg position	Article number	Description (SE)	Description (UK)	Qty	Unit
1	713728	FRONTPLÅT FÖR 3 LAMPOR	FRONTPLATE FOR 3 LAMPS	1	pcs
2	713886	REFLEKTOR FF2 360 1KW KPL	REFLECTOR FF2 360 1KW CPL	2	pcs
3	712028	REFLEKTOR 360 ELLIPS SMST	REFLECTOR 360 ELLIPT. ASM	1	pcs
4		SKR RXK B8X9,5 -FZB -H	SCREW RXK B8X9,5 FZB H	12	pcs
5		MUTTER 4-KANT M5 FZ LÅG DIN 562	NUT 4-SIDED M5 FZ LOW DIN562	1	pcs
6		SKR MRX M5X 8 FZ PHILLIPS	SCREW MRX M5X 8 FZ PHILLIPS	1	pcs

Kablar se sista sidorna **Cables see last pages**

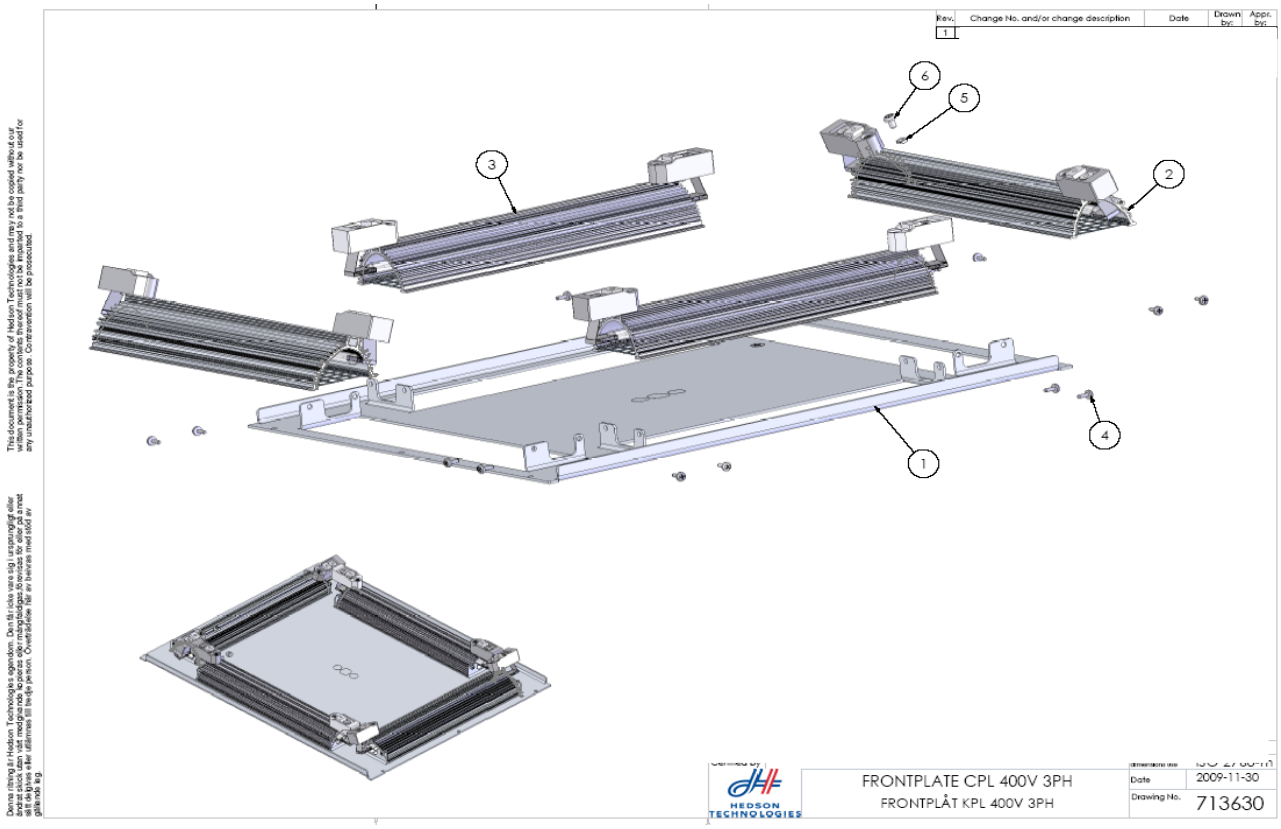

Partslist 713630 rev1

Dwg position	Article number	Description (SE)	Description (UK)	Qty	Unit
1	713631	FRONTPLÅT FÖR 4 LAMPOR	FRONTPLATE FOR 4 LAMPS	1	pcs
2	713632	REFLEKTOR FF1 KPL 1KW	REFLECTOR FF1 360 1KW CPL	2	pcs
3	713633	REFLEKTOR FF2 360 2KW KPL	REFLECTOR FF2 360 2KW CPL	2	pcs
4		SKR RXK B8X9,5 -FZB -H	SCREW RXK B8X9,5 FZB H	16	pcs
5		MUTTER 4-KANT M5 FZ LÅG DIN 562	NUT 4-SIDED M5 FZ LOW DIN562	1	pcs
6		SKR MRX M5X 8 FZ PHILLIPS	SCREW MRX M5X 8 FZ PHILLIPS	9	pcs

Kablar se sista sidorna **Cables see last pages**

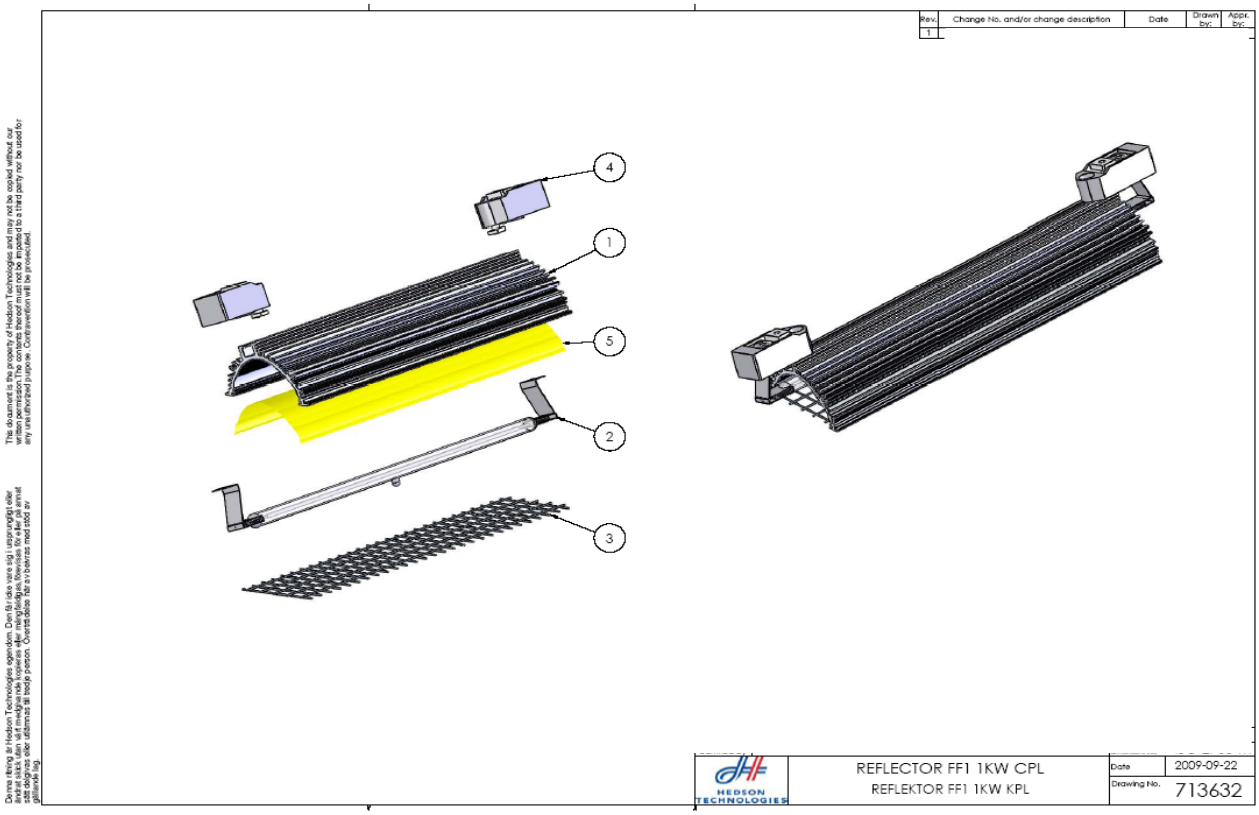

Partslist 713632 rev1

Dwg position	Article number	Description (SE)	Description (UK)	Qty	Unit
1	713578	REFLEKTOR FF1 360	REFLECTOR FF1 360	1	pcs
2	102700	LAMPA-IR 1KW 360 13713X U CPL	LAMP-IR 1KW 235V 360 U CPL	1	pcs
3	713801	SKYDDSNÄT REFLEKTOR FF 360	PROTECTIVE MESH REFLECTOR FF 360	1	pcs
4	712393	LAMPHÅLLARE LRU3 M5X16(EXTRA BRICKA	LAMPHOLDER LRU3 M5X16 (+1 WASHER)	2	pcs
5	104074	FOLIE E360 1	FOIL E360 1	1	pcs

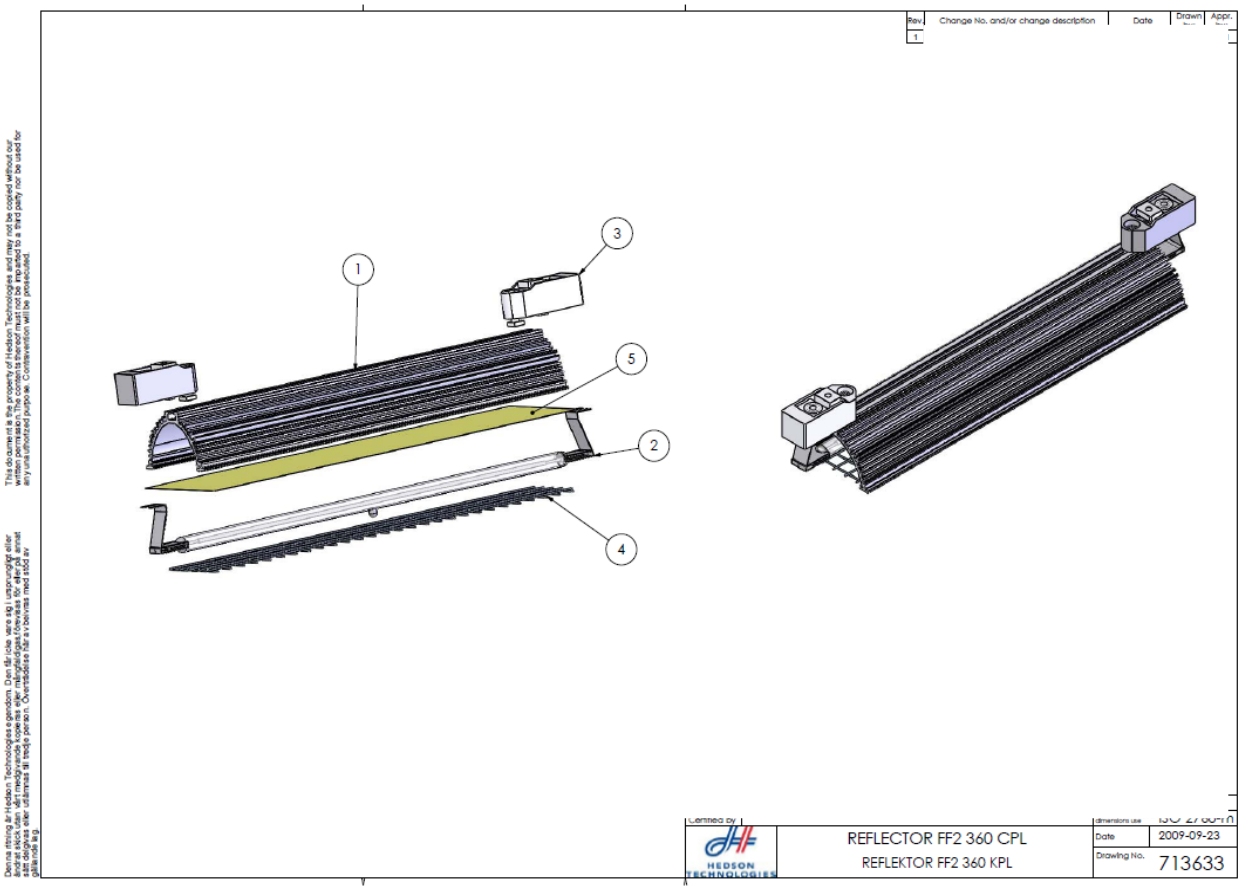

For IRTs with <u>4 lamps cassettes!</u> Use 2kW lamps in this reflector!

Partslist 713633 rev1

Dwg position	Article number	Description (SE)	Description (UK)	Qty	Unit
1	713585	REFLEKTOR FF2 360	REFLECTOR FF2 360	1	pcs
2	102699	LAMPA-IR 2KW 235V 360 U KPL	LAMP-IR 2KW 235V 360 U CPL	1	pcs
3	712393	LAMPHÅLLARE LRU3 M5X16(EXTRA BRICKA	LAMPHOLDER LRU3 M5X16 (+1 WASHER)	2	pcs
4	713801	SKYDDSNÄT REFLEKTOR FF 360	PROTECTIVE MESH REFLECTOR FF 360	1	pcs
5	104074	FOLIE E360 1	FOIL E360 1	1	pcs

For IRTs with <u>3 lamps cassettes!</u> Use 1kW lamps in this reflector!

Partslist 713886 rev1

Dwg position	Article number	Description (SE)	Description (UK)	Qty	Unit
1	713585	REFLEKTOR FF2 360	REFLECTOR FF2 360	1	pcs
2	102700	LAMPA-IR 1KW 235V 360 U CPL	LAMP-IR 1KW 235V 360 U CPL	1	pcs
3	712393	LAMPHÅLLARE LRU3 M5X16(EXTRA BRICKA	LAMPHOLDER LRU3 M5X16 (+1 WASHER)	2	pcs
4	713801	SKYDDSNÄT REFLEKTOR FF 360	PROTECTIVE MESH REFLECTOR FF 360	1	pcs
5	104074	FOLIE E360 1	FOIL E360 1	1	pcs

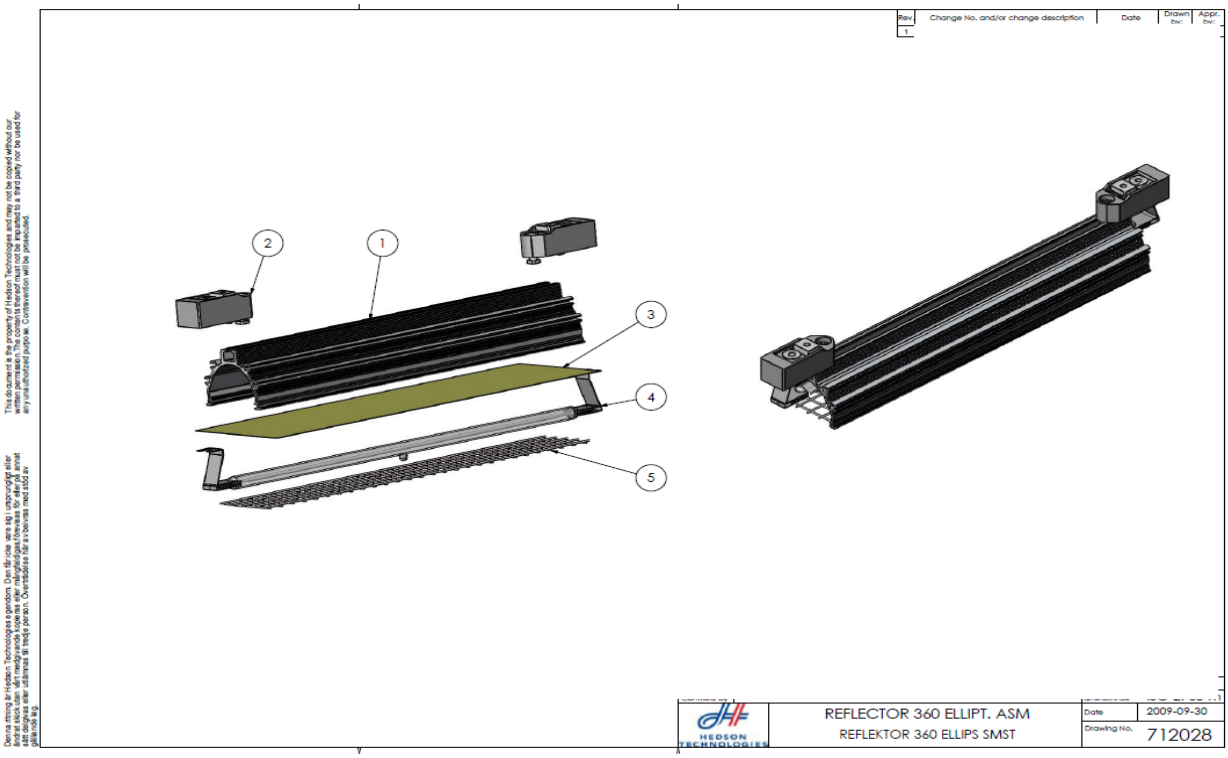

Partslist 712028 rev1

Dwg position	Article number	Description (SE)	Description (UK)	Qty	Unit
1	711198	REFLEKTOR ELLIPS	REFLECTOR ELLIPTIC	1	pcs
2	109790	LAMPHÅLLARE LRU3 M5X16	LAMPHOLDER LRU3 M5X16	2	pcs
3	104074	FOLIE E360 1	FOIL E360 1	1	pcs
4	102700	LAMPA-IR 1KW 360 13713X U CPL	LAMP-IR 1KW 235V 360 U CPL	1	pcs
5	711333	SKYDDSNÄT 360E	PROTECTIVE MESH 360E	1	pcs

This page is intentionally left blank

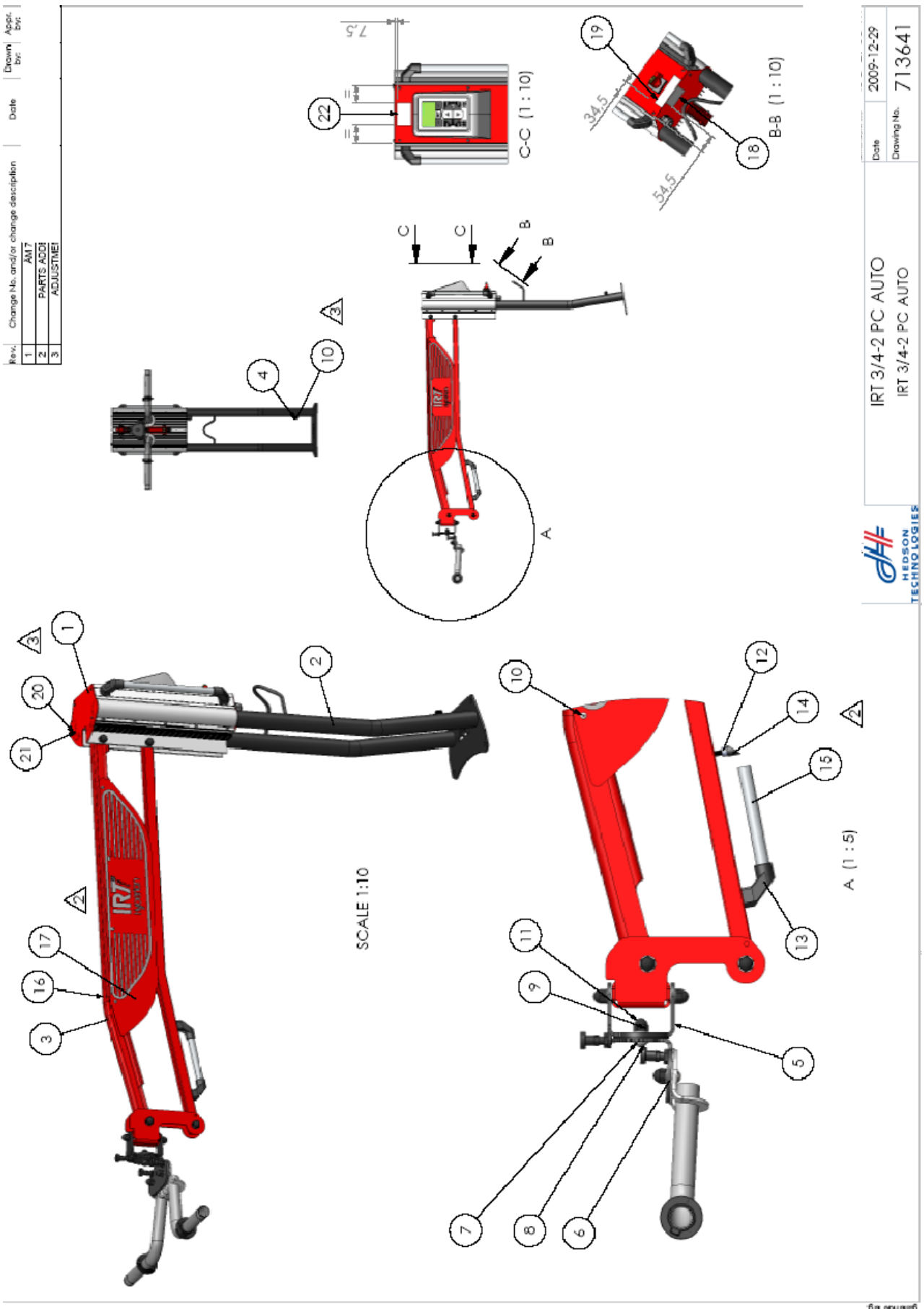
Rev.
Change No. and/or change description
Date
Drawn by:
Appr. by:
1 AM 7
2 PARTS ADDI
3 ADJUSTMEI
SCALE 1:10
A (1 : 5)
C-C (1 : 10)
B-B (1 : 10)
7,5
34,5
54,5
IRT 3/4-2 PC AUTO
IRT 3/4-2 PC AUTO
HEDSON TECHNOLOGIES
Date 2009-12-29
Drawing No. 713641

Partslist 713641 rev3

Dwg position	Article number	Description (SE)	Description (UK)	Qty	Unit
1	713487	STYRENHET 3-2/4-2 PC X 400V KPL	CONTROL UNIT 3-2/4-2 PC X 400V CPL	1	pcs
2	713477	PELARE HYPERION	UPRIGHT PC X	1	pcs
3	713600	PARALLELLARM SMST	PARALLEL ARM ASM	1	pcs
4	712724	KLAMMER GUMMI D11MM	STRAIN RELIEF FOR CABLE DIA=11MM	1	pcs
5	713613	LÄNK/KASSETTARM KPL	BACK-BAR PIVOT ASM.	1	pcs
6	713672	KASSETTARM KPL	BACKBAR ASSEMBLY	1	pcs
7		BRICKA BRB 10.5X21X2 POLYAMID	WASHER PLAIN 10,5x21x2 NYLON	2	pcs
8		SKR K6S ISO 7380 10.9 M10X30H	SCREW K6S ISO 7380 10.9 M10X30H	1	pcs
9		MUTTER LÅS M10 METALL	NUT M10 METAL LOCK	1	pcs
10		SKR MRX M5X6 FZB	SCREW MRX M5X6	9	pcs
11	193722	TÄCKHATT MUTTER M10 16MM	CAP NUT BLACK M10 16MM	1	pcs
12		SKR MC6S M 8X20 FZ	SCREW M8X20	2	pcs
13	713766	SIDSTYCKE RÖRHANDTAG	FASTENER GRAB RAIL	2	pcs
14	713784	PLASTPLUGG HANDTAG	PLASTIC PLUG FOR HANDLE	2	pcs
15	713888	ALUMINIUMRÖR KPL 165mm	ALUMINUM PIPE CPL 165mm	1	pcs
16	713783	KLÄMSKYDD HÖGER SMST	PROTECTION PLATE RIGHT ASM	1	pcs
17	713782	KLÄMSKYDD VÄNSTER SMST	PROTECTION PLATE LEFT ASS	1	pcs
18		ETIKETT 65x70	LABEL 65x70	1	pcs
20		BRICKA AZ M5 FZB DIN 6798	WASHER AZ M5 FZB DIN 6798	1	pcs
21		SKR RXS B10X13FZB PH*	SCREW RXS B10x13 FZB PH	1	pcs
22		DEKAL/IRT-SYSTEM 4-2PC AUTO	LABEL IRT-SYSTEM 4-2PC AUTO	1	pcs

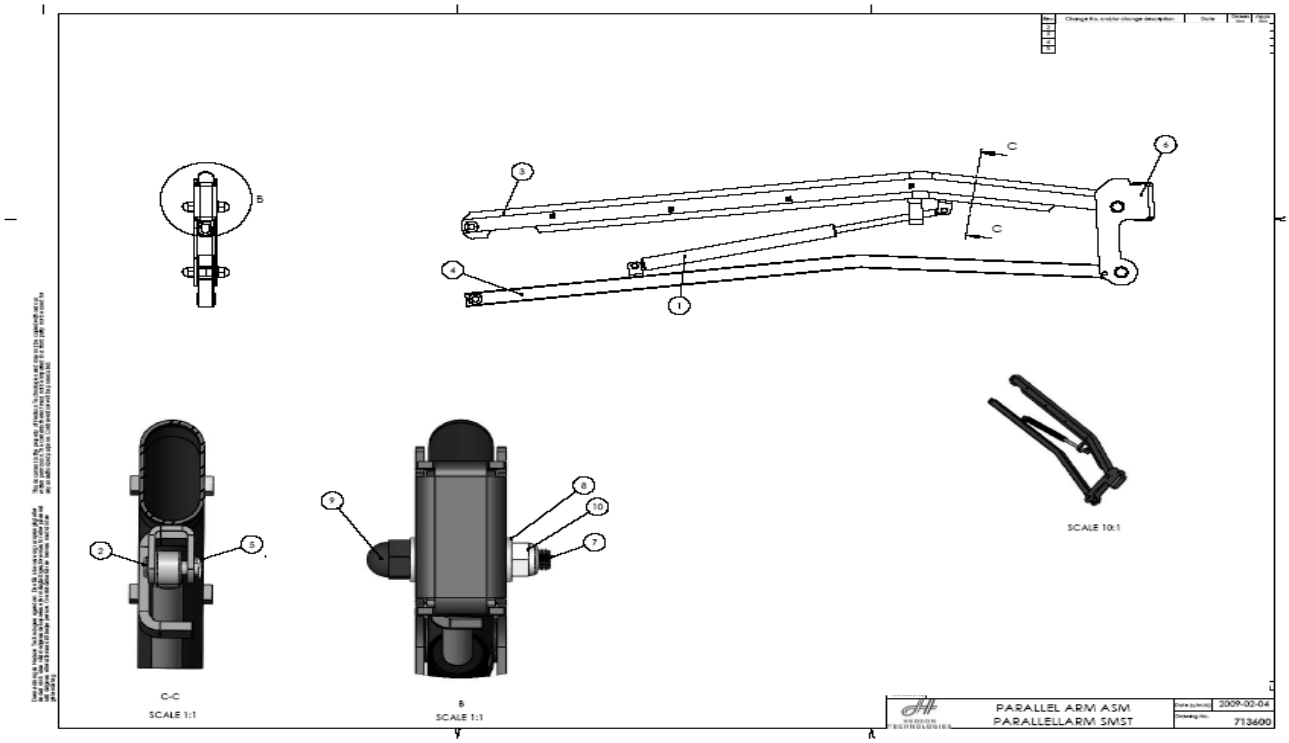

Partslist 713600 rev5

Dwg position	Article number	Description (SE)	Description (UK)	Qty	Unit
1	713795	GASFJÄDER 1400N	GASSTRUT 1400N	1	pcs
2		BULT HCB 8X25 SS2372	PIN HCB 8x25 SS2360	2	pcs
3	713566	PARALLELLARM ÖVRE KPL	PARALLEL ARM UPPER CPL	1	pcs
4	713561	PARALLELLARM UNDRE KPL	PARALLEL ARM LOWER CPL	1	pcs
5	420811	LÅSSPRINT LSC 1,2 rf SS2331	LOCKING-PIN LSC 1,2 rf SS2331	2	pcs
6	713571	KONSOL P-ARMINFÄSTNING FRÄMRE	BRACKET P-ARM FRONT	1	pcs
7	121071	SKR M6S M12X 65 FZB NISO DELGÄNGAD	SCREW M6S M12X65	2	pcs
8	103528	BRICKA BRB M13 FZ 13x24x2,5 HB200	WASHER BRB M13 FZ 13x24x2,5 HB200	4	pcs
9	193723	TÄCKHATT MUTTER M12 18MM	CAP NUT BLACK M12 18MM	4	pcs
10	103394	MUTTER NYLOCK M12 FZB HÖG 18MM	NUT M12 NYLOC HIGH 18MM	2	pcs

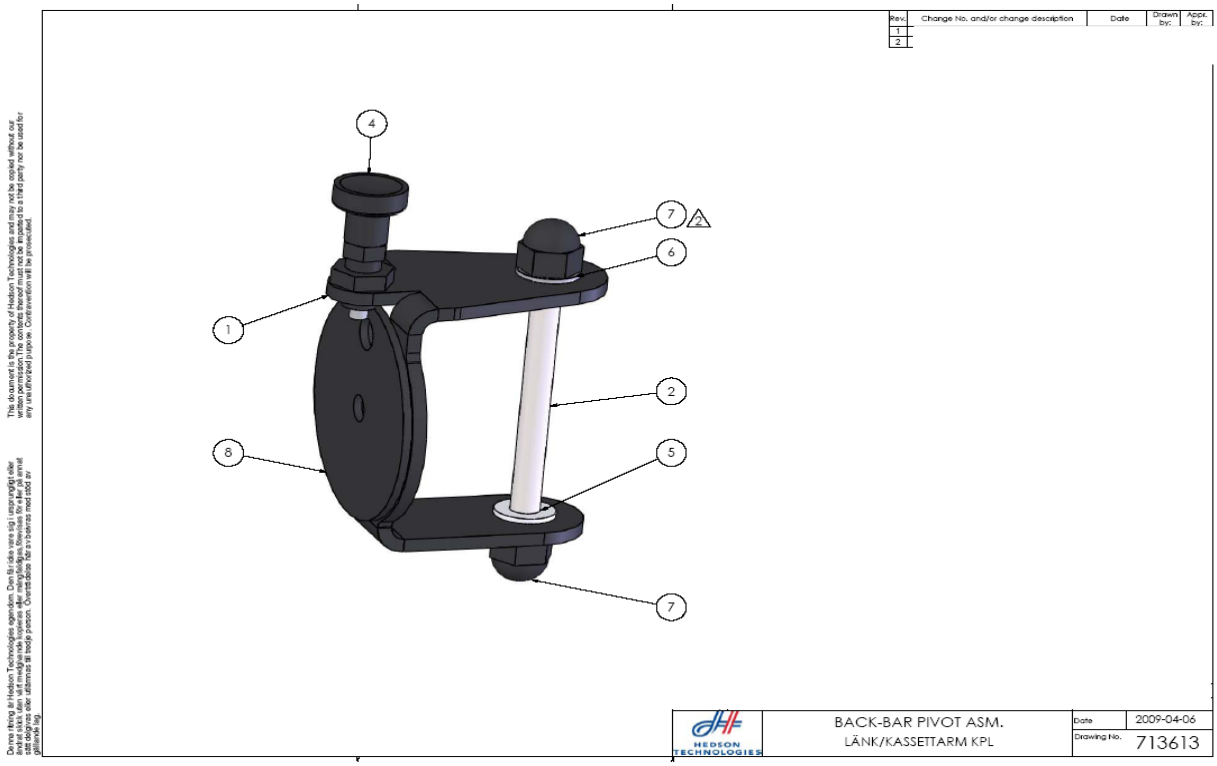

Partslist 713613 rev2

Dwg position	Article number	Description (SE)	Description (UK)	Qty	Unit
1	713572	GRINDLÄNK	LINK	1	pcs
2		SKR M6S M10X120 FZB	SCREW M6S M10x120 FZB	1	pcs
3		MUTTER LÅS M10 METALL	NUT M10 METAL LOCK	1	pcs
4	120295	INST.BULT M MUTTER M12X1,5	ADJ BOLT W NUT M12*1,5	1	pcs
5		BRICKA BRB 10.5X21X2 POLYAMID	WASHER PLAIN 10,5x21x2 NYLON	2	pcs
6		BRICKA 10,5x22x2 FZB HB200	WASHER 10,5x22x2 FZB HB200	2	pcs
7	193722	TÄCKHATT MUTTER M10 16MM	CAP NUT BLACK M10 16MM	2	pcs
8	713606	PLATTA PLAST DIA=85 T=3	PLATE PLASTIC DIA=85 T=3	1	pcs

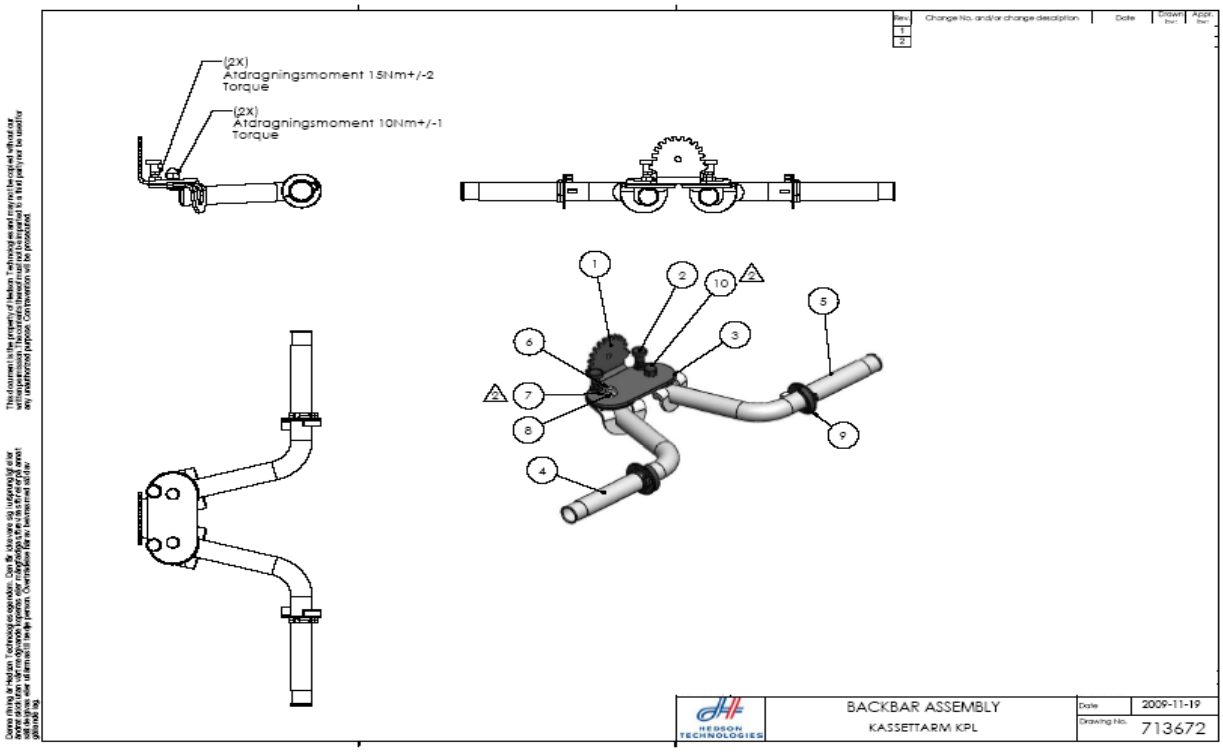

Partslist 713672 rev2

Dwg position	Article number	Description (SE)	Description (UK)	Qty	Unit
1	713673	TANDAT INDEXFÄSTE	BRACKET INDEX	1	pcs
2	120295	INST.BULT M MUTTER M12X1,5	ADJ BOLT W NUT M12*1,5	2	pcs
3	713606	PLATTA PLAST	PLATE PLASTIC DIA=85 T=3	2	pcs
4	713676	ARM KASSETT H SMST	ARM CASSETTE RIGHT ASM	1	pcs
5	713762	ARM KASSETT V SMST	ARM CASSETTE LEFT ASM	1	pcs
6	713677	SKR K6S ISO 7380 10.9 M10X30H	SCREW K6S ISO 7380 10.9 M10X30H	2	pcs
7		BRICKA BRB 10.5X21X2 POLYAMID	WASHER PLAIN 10,5x21x2 NYLON	4	pcs
8		MUTTER LÅS M10 METALL	NUT M10 METAL LOCK	2	pcs
9	713627	BUSSNING YTTRE	BEARING OUTER	2	pcs
10	193722	TÄCKHATT MUTTER M10 16MM	CAP NUT BLACK M10 16MM	2	pcs
		BRICKA 10,5x22x2 FZB HB200	WASHER 10,5x22x2 FZB HB200	2	pcs

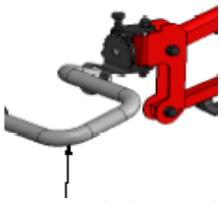

713729 ARM KASSETT SINGEL SMST | ARM CASSETTE SINGLE FABRICATION | 1 | pcs

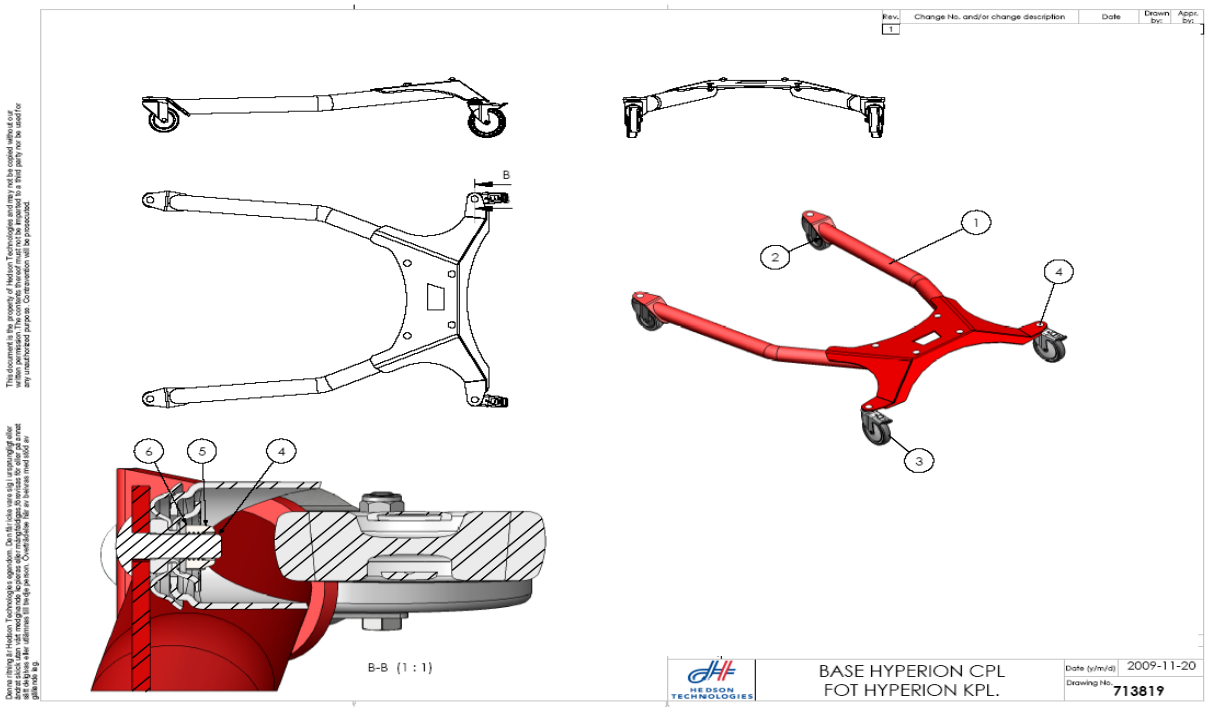

Partslist 713819 rev1

Dwg position	Article number	Description (SE)	Description (UK)	Qty	Unit
1	713472	FOT HYPERION	BASE HYPERION	1	pcs
2	410522	HJUL LÄNK UTAN BROMS DIA 100mm	CASTOR DIA 100mm	2	pcs
3	102258	HJUL LÄNK BROMSAT DIA 125mm	CASTOR BRAKED DIA 125MM	2	pcs
4		SKR MVBF M10X30 FZB VAGNSBULT	SCREW MVBF M10X30FZ	4	pcs
5		MUTTER LÅS M10 METALL	NUT M10 METAL LOCK	4	pcs
6		BRICKA 10,5x22x2 FZB HB200	WASHER 10,5x22x2 FZB HB200	4	pcs
optional 2 and 3	713986	HJULSATS LÅG DIA 100/75mm	CASTOR KIT LOW DIA 100/75mm		

Cabling, Connectors, Pyrometer and Distance components

NOTE: Identify what Model No the product has!
Model Number is found under the control unit.

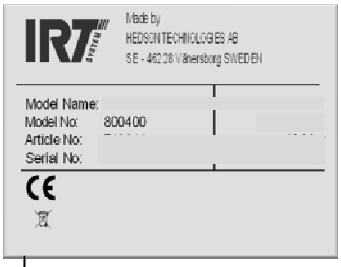

"Arm Power and Fan Cable Kit"

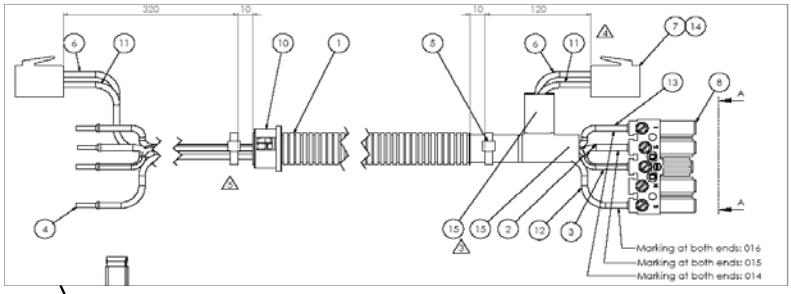

"Pyrometer UltraSonic Laser Cabling Kit" / "UltraSonic Cabling Kit"

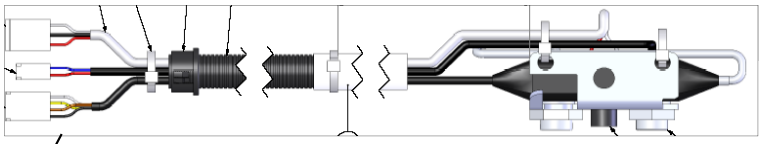

"CABLES KIT CASSETTE POWER"

"Power Connector in the Cassettes"

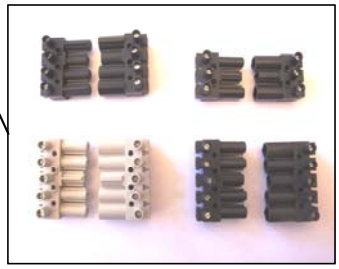

711328 Ultra Sonic Device (without any cabling)

		"CABLES KIT CASSETTE POWER" (a universal cable spares kit (cables and cables shoes) to be fitted between lamp sockets and power connector. Power Connectors not included.	**"Power connectors" inside each cassette!!!!!** female / male	**"Arm Power and Fan Cable Kit"** incl connector for Lamppower and Fan (between computer and power connector inside cassette)	**"Pyrometer UltraSonic Laser Cabling Kit" / "UltraSonic Cabling Kit"** (incl cables and connectors for connecting to computer)	**Ultra Sonic Device** (without any cabling)
800467	IRT 31 PcD NA 230V 1PH 3kW	714018	750368/750369	713855	713737	711328
800447	IRT 31 PcD EU 230V 3PH 3KW	714018	750374/750375	713997	713737	711328
800476	IRT 31 PcD JP 200V 3PH 4P 3KW	714018	750374/750375	713997	713737	711328
800450	IRT 31 PcD EU 400V 3PH 4P 3KW	714018	750372/750373	713810	713737	711328
800451	IRT 31 PcD EU 400V 3PH 5P 3KW	714018	750372/750373	713810	713737	711328
800483	IRT 31 PcD AUS 400V 3PH 3KW	714018	750372/750373	713810	713737	711328
800458	IRT 32 PcD NA 230V 1PH 6KW	714018	750368/750369	713857/713856	713737	711328
800484	IRT 32 PcD JP 200V 3PH 4P 6KW	714018	750374/750375	713987/713988	713737	711328
800459	IRT 32 PcD EU 230V 3PH 6KW	714018	750374/750375	713987/713988	713737	711328
800454	IRT 32 PcD EU 400V 3PH 5P 6KW	714018	750372/750373	713858/713836	713737	711328
800453	IRT 32 PcD EU 400V 3PH 4P 6KW	714018	750372/750373	713858/713836	713737	711328
800455	IRT 32 PcD AUS 400V 3PH 6KW	714018	750372/750373	713858/713836	713737	711328
800422	IRT 41 PcAuto NA 230V 1PH 6KW	714018	750368(2X)/750369(2X)	713797	713637	711328
800485	IRT 41 PcAuto JP 200V 3PH 4P 6KW	714018	750374/750375	713997	713637	711328
800421	IRT 41 PcAuto EU 230V 3PH 4P 6KW	714018	750374/750375	713997	713637	711328
800468	IRT 41 PcAuto NA 230V 3PH 6KW	714018	750374/750375	713997	713637	711328
800425	IRT 41 PcAuto EU 400V 3PH 5P 6KW	714018	750372/750373	713810	713637	711328
800423	IRT 41 PcAuto EU 400V 3PH 4P 6KW	714018	750372/750373	713810	713637	711328
800426	IRT 41 PcAuto AUS 400V 3PH 6KW	714018	750372/750373	713810	713637	711328
800427	IRT 41 PcAuto NA 440 480V 3PH 4P 6KW	714018	750370/750371	713831	713637	711328
800411	IRT 42 PcAuto NA 230V 1PH 12KW	714018	750368(2X)/750369(2X)	713859/713841	713864	711328
800414	IRT 42 PcAuto NA 230V 3PH 12KW	714018	750374/750375	713987/713988	713864	711328
800413	IRT 42 PcAuto EU 230V 3PH 12KW	714018	750374/750375	713987/713988	713864	711328
800415	IRT 42 PcAuto JP 200V 3PH 4P 12KW	714018	750374/750375	713987/713988	713864	711328
800400	IRT 42 PcAuto EU 400V 3PH 5P 12KW	714018	750372/750373	713858/713836	713864	711328
800417	IRT 42 PcAuto AUS 400V 3PH 12KW	714018	750372/750373	713858/713836	713864	711328
800419	IRT 42 PcAuto NA 440 480V 3PH 4P 12KW	714018	750370/750371	713869/713943	713864	711328
800418	IRT 42 PcAuto EU 400V 3PH 4P 12KW	714018	750372/750373	713858/713836	713864	711328
800477	IRT 3-20 PcD 200-230V 3Ph 6kW	714018	750374/750375	713987/713988	713737	711328
800463	IRT 3-20 PcD EU 400V 3PH 6KW	714018	750372/750373	713858/713836	713737	711328
800464	IRT 4-20 PcAuto EU 400V 3PH 12KW	714018	750372/750373	713858/713836	713864	711328
800479	IRT 4-20 PcAuto NA 480V 3PH 12KW	714018	750370/750371	713869/713943	713864	711328
800480	IRT 4-20 PcAuto 200-230V 3Ph 12kW	714018	750374/750375	713987/713988	713864	711328

Power Connector in the Cassettes

750368	K-DON 3-POL HONA SVART GST	CONNECTOR 3-POL FEMALE BLACK
750369	K-DON 3-POL HANE SVART GST	CONNECTOR 3-POL MALE BLACK
750370	K-DON 4-POL HONA SVART GST	CONNECTOR 4-POL FEMALE BLACK
750371	K-DON 4-POL HANE SVART GST	CONNECTOR 4-POL MALE BLACK
750372	K-DON 5-POL HONA SVART GST	CONNECTOR 5-POL FEMALE BLACK
750373	K-DON 5-POL HANE SVART GST	CONNECTOR 5-POL MALE BLACK
750374	K-DON 5-POL HONA GRÅ GST	CONNECTOR 5-POL FEMALE GREY
750375	K-DON 5-POL HANE GRÅ GST	CONNECTOR 5-POL MALE GREY

HEDSON TECHNOLOGIES AB
Hammarvägen 4, SE-232 37 ARLÖV, Sweden
Tel. +46 40 53 42 00
Fax +46 40 43 29 01
www.hedson.se

HEDSON TECHNOLOGIES AB
Box 1530, SE-462 28 VÄNERSBORG, Sweden
Tel. +46 521 281000
Fax +46 521 66909
www.hedson.se